Speed Switch

Speed Switch is a motion sensor which detects the shaft speed of machinery.

ESPB-050

By pressing button

Easy set up completed!!

- **Scan rotating speed accurately**
- **Save it automatically**

Brief overview

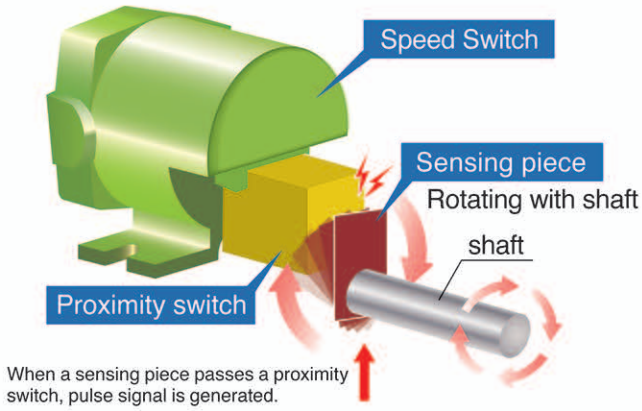

Speed Switch detects the magnetic material attached to the shaft without contact and makes an electric signal. The magnetic material rotates along with the shaft and generates the pulse signal. Since the cycle of pulse signal varies according to the shaft rotating speed, the Speed Switch detects the rotating speed from such cycle.

Features

1. **Rotation auto-scan function by only one press.**
   (Model : ESPB- / ASTC- / ESAW)
2. **Adjustable setting of speed up or down detection and detection point at site.**
   (Model : ESPB- / ASTC- / ESAW)
3. **Rotating speed display as per conveyor speed.**
4. **Wiring for the proximity switch can be extended up to 1 km.**
   (Model : ESPB-051 / ASTC-051)
5. **Super low speed type can be detected highly accurately due to the encoder for the detector part.**
   (Model : ESKB-610M / MU)

pressing button Speed Switch Outdoor Type

Speed Switch makes a detection with the integrated output relay when the shaft speed of machine reduces below the setting speed. Speed Switch is a non-contact type motion sensor which can be used even in severe outdoor environment without any problems and can detect the speed without connecting it to the machine with a coupling, etc.

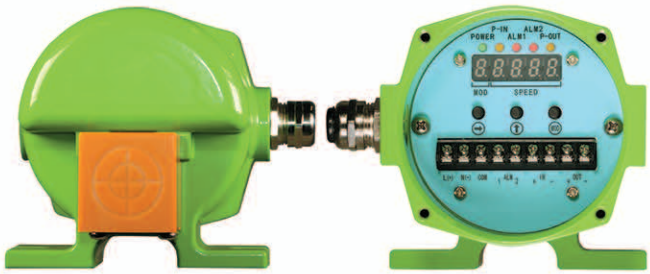

ESPB-050

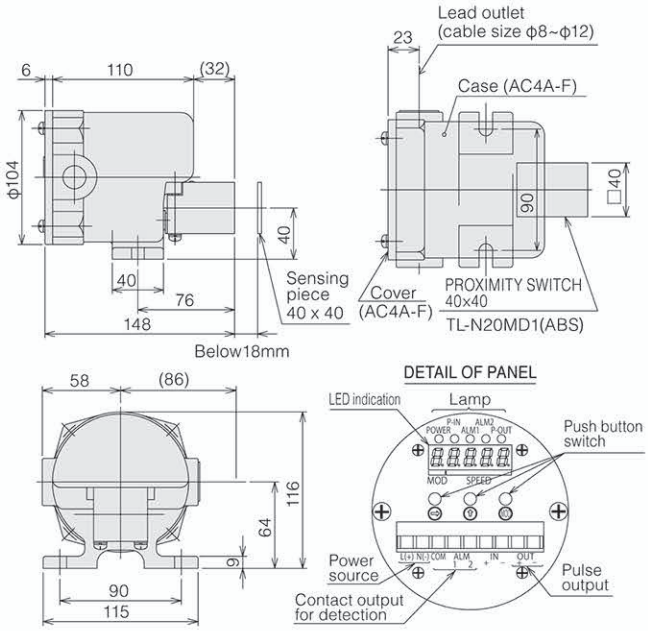

pressing button Speed Switch Separated Proximity Switch Type

This type can be installed with the proximity switch and the main body separated when it is hard to install the main body as the mounting space is narrow. It also can be installed at such place as the main body can not be installed since the place is in relatively high temperature (up to +70°C) or the place is hard to be accessed due to height. This type can set the rotating number at the site apart from the place where detection is made.

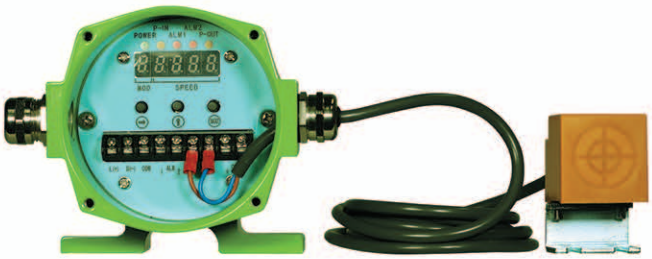

ESPB-051 TL-N20MD1

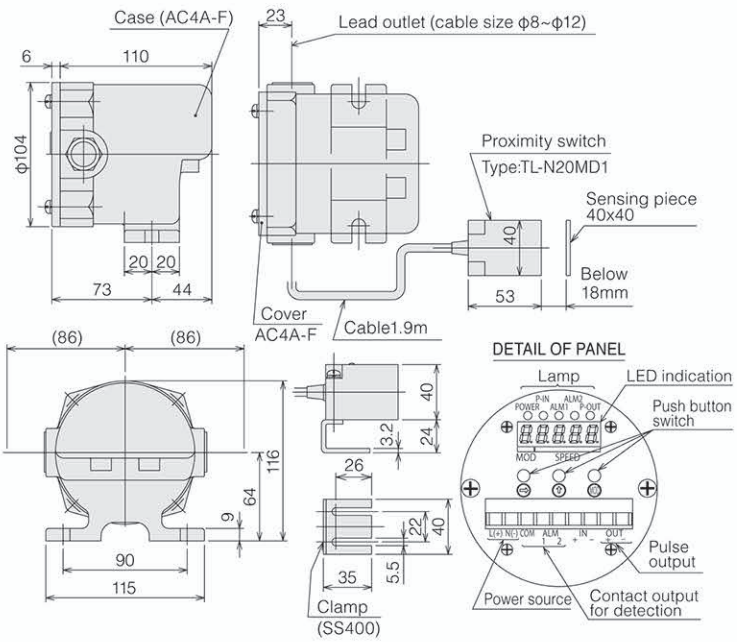

pressing button Speed Switch Transducer In-Panel Mounting Type

This is a space-saving type motion sensor which consists of a transducer to be mounted in the panel and a separated proximity switch to be mounted at the place where detection is conducted. It is possible to conduct speed control in the control room apart from the place where detection is conducted and to conduct collectively a integrated control by mounting side by side transducers from each place where detection is conducted.

ASTC-051

TL-N20MD1

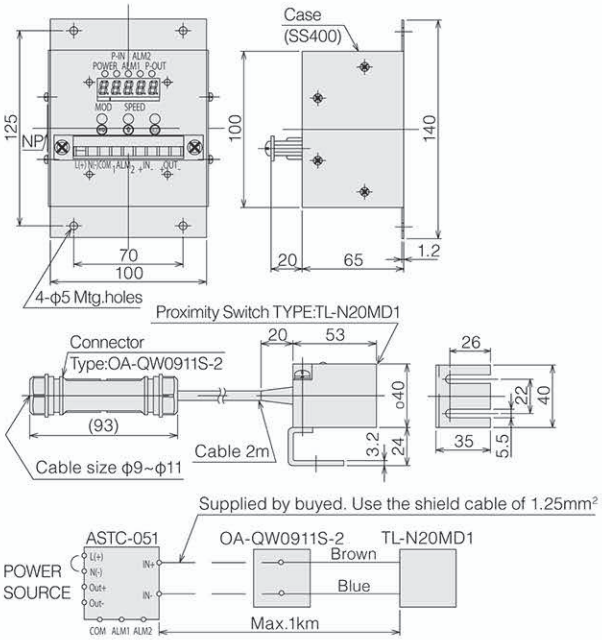

pressing button Speed Switch Touch Roller Type

Touch roller type Speed Switch monitors the speed by rotating the pulley (touch roller), which is contacted with the conveyor. It is easy to install because the tension spring keeps the pulley contact with the belt.

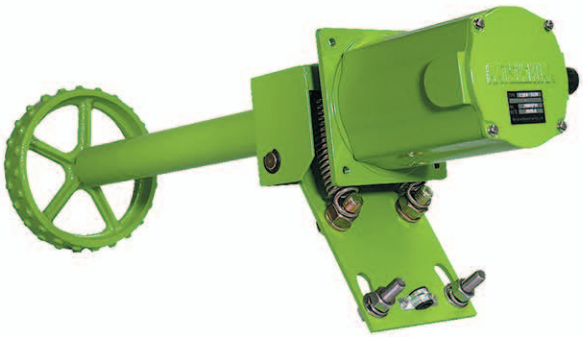

ESAW-102/302

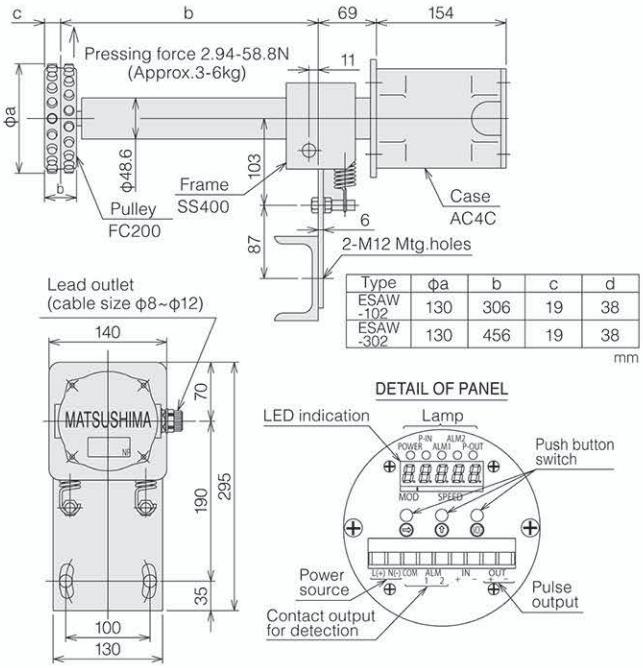

Type	φa	b	c	d
ESAW -102	130	306	19	38
ESAW -302	130	456	19	38

mm

Speed Switch Super Low Speed Type

The superlow speed type is a rotary motion sensor which can detect very low shaft speed from 0.1rpm up to 99.9rpm and can be used to check whether the very low speed shaft such as feed roller of heating furnace, low-speed agitator, thickener etc. is rotated at normal speed. Coupling for connection to shaft is available as option.

ESKB-610M/MU

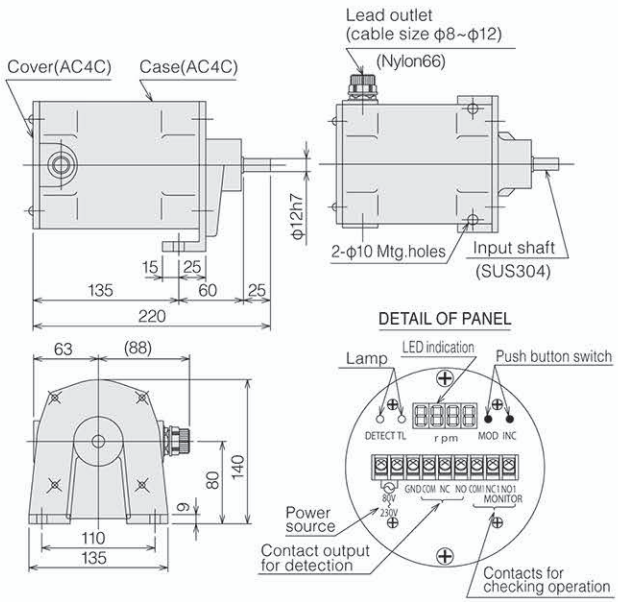

Specifications

Model	pressing button 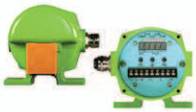 Outdoor type *1 ESPB-050	pressing button Separated proximity switch type *1 Speed Switch:ESPB-051 Proximity Switch:TL-N20MD1	pressing button Transducer in-panel mounting type *1 Transducer:ASTC-051 Proximity Switch:TL-N20MD1	pressing button Touch roller type *1 ESAW-102/302	Super low speed type *2 ESKB-610M/MU
Power source	DC24V,AC20~240V 50/60Hz				AC80~135V, AC160~230V 50/60Hz
Detection range	2~3600P/min				0.1~99.9rpm
	–	–	–	–	200P/rev
Detecting accuracy	±1%				±1%
Output contact	2a *ON/OFF output at detection can be set by parameter value.				1c
Contact capacity	250VAC 6A, 30VDC 6A				250VAC 2A
Pulse output	Open collector Max. 30VDC 50mA				–
Timer	0~999s				0~99s
Detecting distance	18mm or below			–	–
Sensing piece	Magnetic substance t1x40x40mm or bigger			–	–
Connection cable	–	2m cable included (standard)		–	–
Protection	IP67		Transducer: IP40 Proximity Switch: IP67	IP67	IP67
Allowable temperature	–10~+60°C	Transducer: –10~+60°C Proximity Switch: –25~+70°C		–10~+60°C	–10~+55°C
Mass	Approx. 1.3kg	Transducer: approx. 1.1kg Proximity Switch: approx. 250g	Transducer: approx. 1kg Proximity Switch: approx. 250g	Approx. 15kg	Approx. 2.3kg

*1 Speed down or speed up detection can be set by the parameter value.
*2 Speed down or Speed up detection must be specified when ordering.

The products information is available on our homepage.
Scan QR or enter "Matsushima Measure Tecn" for seaching.

Matsushima Measure Tech | web search

Caution
- Read the instructions to ensure correct and suitable application of products.
- Contact our nearest sales office when using our products for any systems used in situations which may be life threatening.

Specifications are subject to change without notice.
All Rights Reserved Copyrights©2018, Matsushima Measuretech Co., Ltd.

Distributor

JQA-QM8197 091

Matsushima Measure Tech Co., Ltd.

HEAD OFFICE
1-8-18, NORIMATSU-HIGASHI, YAHATANISHI-KU, KITAKYUSHU, 807-0837 JAPAN
Tel: +81-93-691-3731 FAX: +81-93-691-3735
http://www.matsushima-m-tech.com E-mail : info@matsushima-m-tech.com

SEOUL LIAISON OFFICE
901, 528 Seobusaet-gil, Seoul, Republic of Korea
Tel: +82-(0)2-852-3731 FAX: +82-(0)2-852-3734

Affiliated company
Shanghai Dahong Matsushima Machinery Co., Ltd.
70 Hengcang Road, Dahong, Malu, Jiading, Shanghai 201818, China
Tel: +86-(0)21-5951-4138 FAX: +86-(0)21-5951-4139